DINION IP starlight 6000 HD

www.boschsecurity.com

BOSCH
Invented for life

- Excellent low-light performance
- Built-in Essential Analytics to trigger relevant alerts and quickly retrieve data
- Intelligent Dynamic Noise Reduction reduces bandwidth and storage requirements by up to 50%
- Extended Dynamic Range mode to see details in bright and dark areas simultaneously
- Auto back focus for fast installation

The DINION IP starlight camera provides clear images 24/7 – even at night or under low-light conditions. The exceptional starlight sensitivity enables this camera to work with a minimum of ambient light. The extended dynamic mode provides detailed images in scenes with challenging lighting.
The camera is available in 1080p or 720p resolution versions and provides up to 60 images per second. There is a selection of high quality lenses separately available.

Functions

Exceptional low-light performance
The latest sensor technology combined with the sophisticated noise suppression results in an exceptional sensitivity in color. The low-light performance is so good that the camera continues to provide excellent color performance even with a minimum of ambient light.

Fast performance
The 60 images-per-second mode provides for optimum performance in fast action scenes and is particularly suitable for casino and banking applications.

Extended dynamic range mode
The extended dynamic range mode is based on a multiple-exposure process that captures more details in the highlights and in the shadows even in the same scene. The result is that you can easily distinguish objects and features, for example, faces with bright backlight.
The actual dynamic range of the camera is measured using Opto-Electronic Conversion Function (OECF) analysis according to IEC 62676 Part 5. This method is used to provide a standard result which can be used to compare different cameras.

Content Based Imaging Technology
Content Based Imaging Technology (CBIT) is used to radically improve image quality in all lighting conditions and to identify areas for enhanced processing. The camera examines the scene using Essential Analytics and provides feedback to re-tune the image processing. This provides better detail in the areas that matter and better all-round performance. With Essential Analytics technology, for example, allows you to view moving objects in bright and dark areas of a scene.

Essential Analytics
The built-in video analysis reinforces the Intelligence-at-the-Edge concept and now delivers even more powerful features. Essential Analytics is ideal for use in controlled environments with limited detection ranges.
The system reliably detects, tracks, and analyzes objects, and alerts you when predefined alarms are triggered. A smart set of alarm rules makes complex tasks easy and reduces false alarms to a minimum. Metadata is attached to your video to add sense and structure. This enables you to quickly retrieve the relevant images from hours of stored video. Metadata can also be used to deliver irrefutable forensic evidence or to optimize business processes based on people counting or crowd density information.
Calibration is quick and easy – just enter the height of the camera. The internal gyro/accelerometer sensor provides the rest of the information to precisely calibrate the video analytics.

Intelligent Dynamic Noise Reduction reduces bandwidth and storage requirements
The camera uses Intelligent Dynamic Noise Reduction which actively analyzes the contents of a scene and reduces noise artifacts accordingly.
The low-noise image and the efficient H.264 compression technology provide clear images while reducing bandwidth and storage by up to 50% compared to other H.264 cameras. This results in reduced-bandwidth streams that still retain a high image quality and smooth motion. The camera provides the most usable image possible by cleverly optimizing the detail-to-bandwidth ratio.

Area-based encoding
Area-based encoding is another feature which reduces bandwidth. Compression parameters for up to eight user-definable regions can be set. This allows uninteresting regions to be highly compressed, leaving more bandwidth for important parts of the scene.

Bitrate optimized profile
The average typical optimized bandwidth in kbits/s for various image rates is shown in the table:

IPS	1080p	720p	480p
60	1900	1400	722
30	1600	1200	600
15	1274	955	478
12	1169	877	438
5	757	568	284
2	326	245	122

Multiple streams
The innovative multi-streaming feature delivers various H.264 streams together with an M-JPEG stream. These streams facilitate bandwidth-efficient viewing and recording as well as integration with third-party video management systems.
Depending on the resolution and frame rate selected for the first stream, the second stream provides a copy of the first stream or a lower resolution stream.
The third stream uses the I-frames of the first stream for recording; the fourth stream shows a JPEG image at a maximum of 10 Mbit/s.

Regions of interest and E-PTZ
Regions of Interest (ROI) can be user defined. The remote E-PTZ (Electronic Pan, Tilt and Zoom) controls allow you to select specific areas of the parent image. These regions produce separate streams for remote viewing and recording. These streams, together with the main stream, allow the operator to separately monitor the most interesting part of a scene while still retaining situational awareness.
Intelligent Tracking can follow objects within the defined regions of interest. Intelligent Tracking can autonomously detect and track moving objects or the user can click on an object which the tracker will then follow.

Storage management
Recording management can be controlled by the Bosch Video Recording Manager (VRM) or the camera can use iSCSI targets directly without any recording software.

Edge recording
Insert a memory card into the card slot to store up to 2 TB of local alarm recording. Pre-alarm recording in RAM reduces recording bandwidth on the network, and extends the effective life of the memory card.

Cloud-based services
The camera supports time-based or alarm-based JPEG posting to four different accounts. These accounts can address FTP servers or cloud-based storage facilities (for example, Dropbox). Video clips or JPEG images can also be exported to these accounts.
Alarms can be set up to trigger an e-mail or SMS notification so you are always aware of abnormal events.

Easy installation
Power for the camera can be supplied via a Power-over-Ethernet compliant network cable connection. With this configuration, only a single cable connection is required to view, power, and control the camera. Using PoE makes installation easier and more cost-effective, as cameras do not require a local power source.
The camera can also be supplied with power from +12 VDC power supplies.

To increase system reliability, the camera can be simultaneously connected to both PoE and +12 VDC supplies. If one power source fails, the other source takes over without a reboot so providing power redundancy.
The auto-focus lens wizard makes it easy for an installer to accurately focus the camera for both day and night operation. The wizard is activated from the web browser or from the on-board camera push button making it easy to choose the workflow that suits best. The automatic motorized back focus adjustment with 1:1 pixel mapping ensures the camera is always focused accurately.

Automatic image rotation
The integrated gyro/accelerometer sensor automatically corrects the image orientation in steps of 90° if the camera is mounted at right angles or upside down. The sensor image can also be rotated manually through steps of 90°.
To efficiently capture details in long hallways without loss of resolution, mount the camera at right angles. The image is displayed upright at full resolution on your monitor.

Scene modes
The camera has a very intuitive user interface that allows fast and easy configuration. Nine configurable modes are provided with the best settings for a variety of applications. Different scene modes can be selected for day or night situations.

Hybrid operation
A surge-protected analog video output allows full hybrid operation. This means that high resolution IP video streaming and an analog video output are available simultaneously. The hybrid functionality offers an easy migration path from legacy CCTV to a modern IP-based system.

True day/night switching
The camera is a true day/night camera with a mechanical filter for vivid daytime color and exceptional night-time imaging while maintaining sharp focus under all lighting conditions. The filter can be switched remotely, or automatically via a light level sensor or contact input.

Data security
Special measures have been put in place to ensure the highest level of security for device access and data transport. The three-level password protection with security recommendations allows users to customize device access. Web browser access can be protected using HTTPS and firmware updates can also be protected with authenticated secure uploads.
The on-board Trusted Platform Module (TPM) and Public Key Infrastructure (PKI) support, guarantee superior protection from malicious attacks. The 802.1x network authentication with EAP/TLS, supports TLS 1.2 with updated cipher suites including AES 256 encryption.

The advanced certificate handling offers:
- Self-signed unique certificates automatically created when required
- Client and server certificates for authentication
- Client certificates for proof of authenticity
- Certificates with encrypted private keys

Complete viewing software
There are many ways to access the camera's features: using a web browser, with the Bosch Video Management System, with the free-of-charge Bosch Video Client or Video Security Client, with the video security mobile app, or via third-party software.

Video security app
The Bosch video security mobile app has been developed to enable Anywhere access to HD surveillance images allowing you to view live images from any location. The app is designed to give you complete control of all your cameras, from panning and tilting to zoom and focus functions. It's like taking your control room with you.
This app, together with the separately available Bosch transcoder, will allow you to fully utilize our dynamic transcoding features so you can play back images even over low-bandwidth connections.

System integration
The camera conforms to the ONVIF Profile S, Profile Q and Profile G specifications. Compliance with these standards guarantees interoperability between network video products regardless of manufacturer. Third-party integrators can easily access the internal feature set of the camera for integration into large projects. Visit the Bosch Integration Partner Program (IPP) website (ipp.boschsecurity.com) for more information.

Certifications and approvals

Standards	
Emission	EN 55032:2012 /AC2013 class B EN 50121-4:2006 /AC:2008 FCC: 47CFR15, class B (2015-10-1)
Immunity	EN 50130-4:2011 /A12014 (PoE, +12VDC)* EN 50121-4:2006 /AC:2008
Environmental	EN 50130-5:2011 Class II
Safety	EN 62368-1:2014/AC:2015 EN 60950-1:2006 /A11:2009 /A1:2010 / A12:2011 /A2:2013 UL 62368-1, Ed. 2, Dec 1st, 2014 UL 60950-1, Ed. 2, October 14, 2014 CAN/CSA-C22.2 No. 62368-1 CAN/CSA-C22.2 No. 60950-1
HD	SMPTE 296M-2001 (Resolution: 1280x720) SMPTE 274M-2008 (Resolution: 1920x1080)

Standards	
Color representation	ITU-R BT.709-6
ONVIF conformance	EN 50132-5-2:2011/AC:2012 EN 62676-2-3:2014

* Chapters 7 and 8 (mains voltage supply requirement) are not applicable to the camera. However, if the system in which this camera is used needs to comply with this standard, then any power supplies used must comply with this standard.

Marks	CE, cULus, WEEE, PADS, RCM, EAC and China RoHS

Installation/configuration notes

Controls

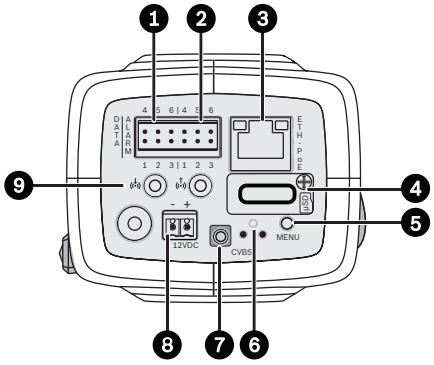

1	Data (RS485/422/232)	6	Reset button
2	Alarm in, alarm out	7	Video out (SMB connector)
3	10/100 Base-T Fast Ethernet	8	Power supply input (12 VDC only)
4	MicroSD card slot	9	Audio in / Audio out
5	Menu button		

Dimensions

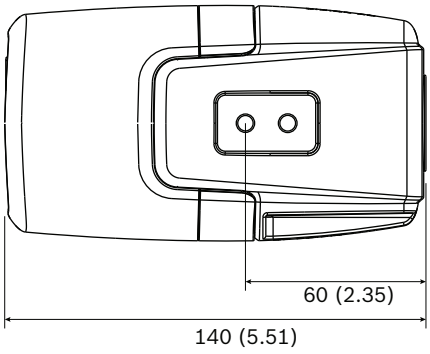

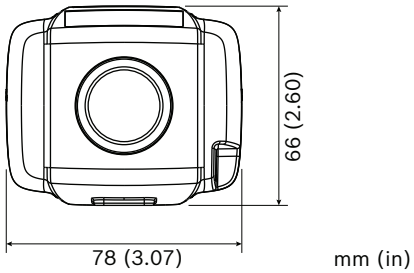

Parts included

Technical specifications

Power	
Input voltage	Power-over-Ethernet (48 VDC nominal) and/or +12 VDC ±10% (auxiliary)
PoE IEEE standard	802.3af (802.3at Type 1) Power level: Class 3
Power Consumption	7.2 W max.
Current draw (PoE)	200 mA max.
Current draw (12 VDC)	600 mA max.
Sensor (1080p version)	
Sensor type	1/2.8-inch CMOS
Effective pixels	1920 (H) x 1080 (V); 2MP (approx.)
Sensor (720p version)	
Sensor type	1/2.8-inch CMOS
Effective pixels	1280 (H) x 720 (V)
Starlight sensitivity	
(3200K, reflectivity 89%, 1/25, F1.2, 30IRE)	
Color	0.014 lx
Mono	0.0047 lx
Dynamic range	
High Dynamic Range (HDR) Mode	120 dB WDR
Measured under IEC 62676 Part 5	108 dB WDR

Video streaming	
Video compression	H.264 (MP); M- JPEG
Streaming	Multiple configurable streams in H.264 and M-JPEG, configurable frame rate and bandwidth. Regions of Interest (ROI)
Camera processing latency	<55 ms (1080p60)
GOP structure	IP, IBP, IBBP
Encoding interval	1 to 50 [60] ips

Video resolution (H x V)	
1080p HD	1920 x 1080 (1080p version only)
1.3 MP (4:3)	1280 x 960 (1080p version only)
Upright mode 1080p	1080 x 1920 (1080p version only)
720p HD	1280 x 720
Upright mode 720p	720 x 1280
D1 4:3 (cropped)	704 x 480
480p SD	Encoding: 704 x 480; Displayed: 854 x 480
432p SD	768 x 432
288p SD	512 x 288
240p SD	Encoding: 352 x 240; Displayed: 432 x 240
144p SD	256 x 144

Camera installation	
Application variant (1080p version)	Starlight mode (default) / HDR - extended dynamic mode / 1.3 MP starlight mode / 1.3 MP extended dynamic mode
Application variant (720p version)	Starlight mode (default) / HDR - extended dynamic mode
Base frame rate	25/30/50/60 fps (PAL/NTSC for analog output)
Mirror image	On / Off
Flip image	On / Off
Rotate	0° / 90° / 180° / 270°
Camera LED	Enable/disable
Analog output	Off, 4:3 letterbox, 4:3 crop, 16:9
Positioning	Coordinates / Mounting height
Lens wizard	Autofocus, remote zoom

Video functions - color	
Adjustable picture settings	Contrast, Saturation, Brightness
White Balance	Four automatic modes, manual mode and measure

Video functions - ALC	
ALC level	Adjustable
Saturation	Adjustable from peak to average
Shutter	Automatic Electronic Shutter (AES); Fixed shutter (1/25[30] to 1/15000) selectable; Default shutter
Day/Night	Auto (adjustable switch points), Color, Monochrome

Video functions - enhance	
Sharpness	Sharpness enhancement level selectable
Backlight compensation	On/off
Contrast enhancement	On/off
Noise reduction	Intelligent Dynamic Noise Reduction with separate temporal and spatial adjustments
Intelligent defog	Intelligent Defog automatically adjusts parameters for best picture in foggy or misty scenes (switchable)

Video content analysis	
Analysis type	Essential Analytics
Configurations	Silent VCA / Profile1/2 / Scheduled / Event triggered
Alarm rules (combinable)	Any object Object in field Line crossing Enter / leave field Loitering Follow route Idle / removed object Counting Occupancy Crowd density estimation Condition change Similarity search
Object filters	Duration Size Aspect ratio Speed Direction Color Object classes (4)

Video content analysis	
Tracking modes	Standard (2D) tracking 3D tracking 3D people tracking Museum mode
Calibration / Geolocation	Automatic based on gyro / accelerometer data and camera height
Tamper detection	Maskable
Detection	Audio

Additional functions	
Scene modes	Nine default modes, Scheduler
Privacy Masking	Eight independent areas, fully programmable
Video authentication	Off / Watermark / MD5 / SHA-1 / SHA-256
Display stamping	Name; Logo; Time; Alarm message
Pixel counter	Selectable area

Local storage	
Internal RAM	60 s pre-alarm recording
Memory card slot	Supports up to 32 GB microSDHC / 2 TB microSDXC card. (A memory card of Class 6 or higher is recommended for HD recording)
Recording	Continuous recording, ring recording. alarm/ events/schedule recording

Input/output	
Analog video out	CVBS (PAL/NTSC), 1 Vpp, SMB, 75 Ohm (surge protected)
Audio connectors	3.5 mm stereo jack (x2)
Audio line in	12 kOhm typical, 1 Vrms max
Audio line out	1 Vrms at 1.5 kOhm typical,
Alarm input connectors	Clamp (x2 non-isolated closing contact)
Alarm input activation voltage	+5 VDC to +40 VDC (+3.3 VDC with DC-coupled 22 kOhm pull-up resistor)
Alarm output connector	Clamp
Alarm output voltage	30 VAC or +40 VDC Maximum 0.5 A continuous, 10VA
Data port	RS-232/422/485

Audio streaming	
Standard	G.711, 8 kHz sampling rate L16, 16 kHz sampling rate AAC-LC, 48 kbps at 16 kHz sampling rate AAC-LC, 80 kbps at 16 kHz sampling rate
Signal-to-Noise Ratio	>50 dB
Audio Streaming	Full-duplex / half duplex

Software	
Unit discovery	IP Helper
Unit configuration	Via web browser or Configuration Manager
Firmware update	Remotely programmable
Software viewing	Web browser; Video Security Client; Video Security App; Bosch Video Management System; Bosch Video Client; or third party software
Latest firmware and software	http://downloadstore.boschsecurity.com/

Network	
Protocols	IPv4, IPv6, UDP, TCP, HTTP, HTTPS, RTP/ RTCP, IGMP V2/V3, ICMP, ICMPv6, RTSP, FTP, Telnet, ARP, DHCP, APIPA (Auto-IP, link local address), NTP (SNTP), SNMP (V1, MIB-II), 802.1x, DNS, DNSv6, DDNS (DynDNS.org, selfHOST.de, no-ip.com), SMTP, iSCSI, UPnP (SSDP), DiffServ (QoS), LLDP, SOAP, Dropbox, CHAP, digest authentication
Encryption	TLS 1.2, SSL, DES, 3DES
Ethernet	10/100 Base-T, auto-sensing, half/full duplex
Connectivity	Auto-MDIX
Interoperability	ONVIF Profile S; Profile G ; Profile Q GB/T 28181

Optical	
Lens mount	CS mount (C-mount with adapter ring)
Lens connector	Standard 4-pin DC-iris connector
Lens Types	Manual and DC-Iris auto-detect with override DC-iris drive: max. 50 mA continuous
Lens Controls	Wizard from web page or camera button

Mechanical	
Dimensions (W x H x L)	78 x 66 x140 mm (3.07 x 2.6 x 5.52 inch) without lens
Weight	690 g (1.52 lb) without lens

Mechanical	
Color	RAL 9007 Metallic Titanium
Tripod Mount	Bottom (isolated) and top 1/4-inch 20 UNC

Environmental	
Operating Temperature	-20°C to +55°C (-4°F to 131°F)
Storage Temperature	-30°C to +70°C (-22°F to +158°F)
Operating Humidity	20% to 93% RH
Storage Humidity	up to 98% RH

Ordering information

DINION IP starlight 6000 HD
High-performance IP box camera for intelligent HD surveillance in low light and with hybrid IP/analog operation.
720p
Order number **NBN-63013-B**

DINION IP starlight 6000 HD
High-performance IP box camera for intelligent HD surveillance in low light and with hybrid IP/analog operation.
1080p
Order number **NBN-63023-B**

Accessories

Varifocal SR Megapixel Lens
Varifocal SR megapixel IR corrected lens. 1/2.5" sensor; CS-mount; 4-pin SR-iris; 5 MP; 9 to 40 mm; F1.5 to F8
Order number **LVF-5005C-S0940**

Varifocal SR Megapixel Lens
Varifocal SR megapixel lens. 1/2" sensor; C-mount; 4-pin SR-iris; 3 MP; 3.8 to 13 mm; F1.4 to F8
Order number **LVF-5003N-S3813**

Varifocal SR Megapixel Lens
Varifocal SR megapixel IR corrected lens. 1/2.5" sensor; CS-mount; 4-pin SR-iris; 5 MP; 1.8 to 3 mm; F1.8 to F8
Order number **LVF-5005C-S1803**

Varifocal SR Megapixel Lens
Varifocal SR megapixel IR corrected lens. 1/1.8" sensor; CS-mount; 4-pin SR-iris; 5MP; 4.1 to 9 mm; F1.6 to F8
Order number **LVF-5005C-S4109**

Varifocal Megapixel Lens
Varifocal megapixel IR corrected lens. 1/1.8" sensor max; C-mount; 4-pin DC-iris; 5 MP; 12 to 50 mm; F1.6 to T360
Order number **LVF-5005N-S1250**

S1374 Adapter
Adapter to convert C mount lens to CS mount camera
Order number **S1374**

UPA-1220-60 Power Supply
Power supply for camera. 120 VAC, 60 Hz In; 12 VDC, 1 A Out; regulated
Order number **UPA-1220-60**

UPA-1220-50 Power Supply
Power supply for camera. 220 VAC, 50 Hz In; 12 VDC, 1 A Out; regulated
Order number **UPA-1220-50**

TC9210U Indoor Camera Mount
universal wall/ceiling grid, for 6-inch, 4.5 kg (10 lb) max load, off-white finish, incl. T-Bar ceiling clip and wall/ceiling mount flange
Order number **TC9210U**

UHO-HBGS-51 Outdoor Housing
Outdoor housing for (230 VAC / 12 VDC) camera. 230 VAC power supply; blower; feed-through cabling
Order number **UHO-HBGS-51**

UHO-HBGS-61 Outdoor Housing
Outdoor housing for (120 VAC / 12 VDC) camera. 120 VAC (60 Hz) power supply; blower; feed-through cabling
Order number **UHO-HBGS-61**

UHO-HBGS-11 Outdoor Housing
Outdoor housing for (24 VAC / 12 VDC) camera. 24 VAC power supply; blower; feed-through cabling
Order number **UHO-HBGS-11**

UHO PoE Outdoor Camera Housing
Outdoor camera housing with PoE input. IP67; cable gland
Order number **UHO-POE-10**

LTC 9215/00 Mount
Wall mount for UHO outdoor housing – 18 cm (7 in.), cable feed-through
Order number **LTC9215/00**

LTC 9215/00S Mount
Short wall mount for UHO outdoor housing – 30 cm (12 in.), cable feed-through
Order number **LTC9215/00S**

LTC 9219/01 Feed-through J-Mount
for 15-inch, 9 kg (20 lb) max load, for LTC 938x and LTC 948x series housings, light gray finish
Order number **LTC 9219/01**

LTC 9210/01 Column Mount
Feed-through column mount for 20 cm (8 in.), 9 kg (20 lb) maximum load. Light gray finish.
Order number **LTC 9210/01**

LTC 9213/01 Pole Mount Adapter
Flexible pole mount adapter for camera mounts (use together with the appropriate wall mount bracket). Max. 9 kg (20 lb); 3 to 15 inch diameter pole; stainless steel straps
Order number **LTC 9213/01**

Monitor/DVR Cable SMB 0.3M
0.3 m (1 ft) analog cable, SMB (female) to BNC (female) to connect camera to coaxial cable
Order number **NBN-MCSMB-03M**

Monitor/DVR Cable SMB 3.0M
3 m (9 ft) analog cable, SMB (female) to BNC (male) to connect camera to monitor or DVR
Order number **NBN-MCSMB-30M**

VIDEOJET XTC XF Video Transcoder
High-performance video transcoder. H.264; CF card slot; ROI; max resolution 1080p; 2 channels
Order number **VJT-XTCXF**

Represented by:

North America:
Bosch Security Systems, Inc.
130 Perinton Parkway
Fairport, New York, 14450, USA
Phone: +1 800 289 0096
Fax: +1 585 223 9180
security.sales@us.bosch.com
www.boschsecurity.us

Europe, Middle East, Africa:
Bosch Security Systems B.V.
P.O. Box 80002
5617 BA Eindhoven, The Netherlands
Phone: + 31 40 2577 284
Fax: +31 40 2577 330
emea.securitysystems@bosch.com
www.boschsecurity.com

Asia-Pacific:
Robert Bosch (SEA) Pte Ltd, Security Systems
11 Bishan Street 21
Singapore 573943
Phone: +65 6571 2808
Fax: +65 6571 2699
apr.securitysystems@bosch.com
www.boschsecurity.asia

China:
Bosch (Shanghai) Security Systems Ltd.
203 Building, No. 333 Fuquan Road North IBP
Changning District, Shanghai
200335 China
Phone +86 21 22181111
Fax: +86 21 22182398
www.boschsecurity.com.cn

Latin America and Caribbean:
Robert Bosch Ltda Security Systems Division
Via Anhanguera, Km 98
CEP 13065-900
Campinas, Sao Paulo, Brazil
Phone: +55 19 2103 2860
Fax: +55 19 2103 2862
latam.boschsecurity@bosch.com
www.boschsecurity.com

© Bosch Security Systems 2016 | Data subject to change without notice
20827877387 | en, V1, 10. Mar 2016